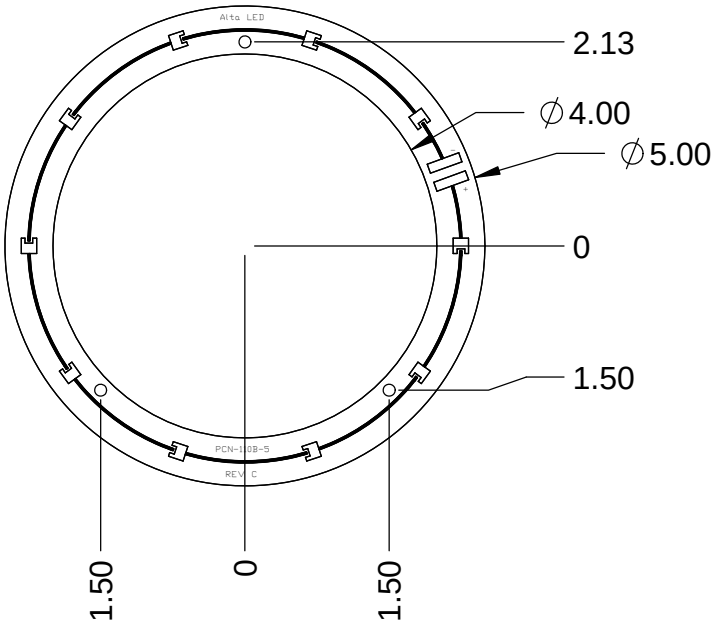

ELECTRICAL STATISTICS	
DC VOLTAGE INPUT (V)	30
DC CURRENT INPUT (mA)	350
OUTPUT POWER (W)	10

DRILL CHART				
SYM	DIAM	TOL	QTY	NOTE
X	.125		3	PLATED
TOTAL			3	

		UNLESS OTHERWISE SPECIFIED:		NAME	DATE
		DIMENSIONS ARE IN INCHES TOLERANCES: FRACTIONAL± ANGULAR: MACH± BEND ± TWO PLACE DECIMAL ± THREE PLACE DECIMAL ±	DRAWN		
			CHECKED		
			ENG APPR.		
			MFG APPR.		
		INTERPRET GEOMETRIC TOLERANCING PER:	Q.A.		
		MATERIAL Al. Backing	COMMENTS:		
NEXT ASSY	USED ON	FINISH Tin Plated			
APPLICATION		DO NOT SCALE DRAWING			

ALTA LED

TITLE:

110B-5 FABRICATION DRAWINGS

SIZE	DWG. NO.	REV
A	Alta_110B-5_C	C
SCALE: 1:2	WEIGHT:	SHEET 1 OF 1

PROPRIETARY AND CONFIDENTIAL

THE INFORMATION CONTAINED IN THIS DRAWING IS THE SOLE PROPERTY OF <INSERT COMPANY NAME HERE>. ANY REPRODUCTION IN PART OR AS A WHOLE WITHOUT THE WRITTEN PERMISSION OF <INSERT COMPANY NAME HERE> IS PROHIBITED.

5 4 3 2 1